PROGRAMMABLE TRANSDUCER

CP4000

INSTRUCTION MANUAL

1.- GENERAL DESCRIPTION.

2.- TECHNICAL DESCRIPTION.

3.- VARIANTS.

4.- DIMENSIONS AND MOUNTING.

5.- CABLING.

6.-COMMUNICATION PROTOCOL.

7.- OUTPUT CONFIGURATION.

8.- RELATED SOFTWARE.

9.- SAFETY RECOMMENDATIONS.

1.- GENERAL DESCRIPTION.

TheCP400X Multitransducer model receives the current and voltage signals from an electric power system, and measures all the main variables related with it, allowing to send them by means of four analog outputs, two digital outputs, and one serial line, to the adequate receivers. Any analog output can be programmed to represent any live variable, for instance voltage, current, or power. The digital outputs can be configured to represent energy pulses or alarms. Through the serial output every parameter is accessible, allowing to send them to a computer to provide recording and statistical processes.

The unit uses a 16 bit microprocessor, and a ten bit plus sign A/D converter allows to get a very high accuracy, great flexibility in input and output ranges programming, and powerful communication capabilities.

Special care has been taken in the design, not only to provide good accuracy, but also high reliability, a strong immunity to EMC, -in order to use the equipment in industrial environment-, and high isolation characteristics. They are prepared for DIN rail mounting, and all the connections are done by means of screws on the front. An example of marking (for a three systems unit), is shown in the drawing.

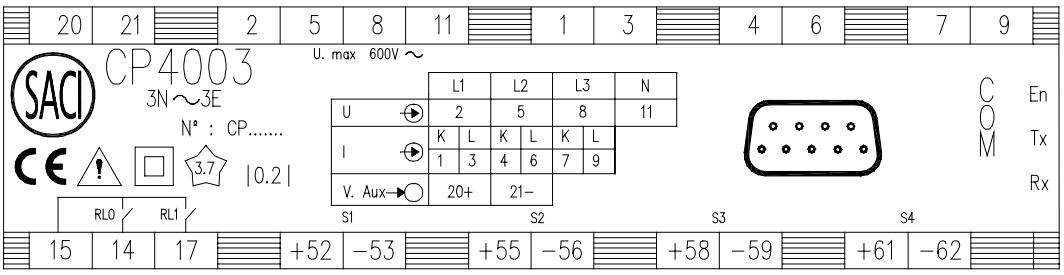

2.- TECHNICAL DESCRIPTION.

2.1. – MEASURING PRINCIPLE.

The measuring is done in a totally digital way. The microprocessor controls the A/D converter, takes its samples, stores them and processes them to get the values as the following:

$$Vi = sqr (\Sigma Vij^2 / 32)$$

$$Ii = sqr (\Sigma Iij^2 / 32)$$

$$Pi = \Sigma (Vij * Iij) / 32$$

$$Qi = \Sigma (Vi\,j\text{-}8 * Iij) / 32$$

$$Si = sqr (Pi^2 + Qi^2)$$

In the case of three system devices, the calculations are done for the three voltage phases and the three current phases. In two systems devices, the calculations refer only to the input signals used. That is only is done the multiplication V12 * I1, and V32* I3. These values added provide the total active power, but they do not have a meaning corresponding to any specific phase. They appear in the positions defined by P1 and P3, (or Q1 and Q3), and then P2 and Q2 do not appear. As there is no I2, this value can not be read, as well as the variables related to it, as PF2 and QF2. V31, however is calculated by

$$V31^2 = V12^2 + V32^2 + \tfrac{1}{2}\ V12 * V32$$

This fact means that in the case a single phase signal is applied both to V1 and V3, although there is not a voltage difference between them, the device will answer a value corresponding to this calculation.

The frequency is measured using the microprocessor internal timers. Its value is used when the energy is computed, as well as to provide the sample synchronization, which must be exactly 32 samples per signal and period. The rest of the parameters are calculated from these basic measures, totaling up to the table shown.

PARAMETER	Total	L1	L2	L3

Phase voltage	Mean	V1	V2	V3
Line voltage	Mean	V12	V23	V31
Line current	Mean	I1	I2	I3
Active power	P	P1	P2	P3
Reactive power	Q	Q1	Q2	Q3
Apparent power	S	S1	S2	S3
Power factor	PF	PF1	PF2	PF3
Reactive power factor	QF	QF1	QF2	QF3
Frequency	F	-	-	-
Active energy (pos.)	Ep+	-	-	-
Active energy (neg.)	Ep-	-	-	-
Reactive energy (ind.)	Eqind(+)	-	-	-
Reactive energy (cap.)	Eqcap(-)	-	-	-
THD (%) V	-	V1	V2	V3
THD (%) I		I1	I2	I3

NOTE:
Energies only by pulses output. Can be obtained trough serial line if is ordered.

THD(%) only trough serial line.

2.2. – BLOCK DIAGRAM.

A diagram showing the following blocks is in the figure in the following page.

2.2.1. – Input transformers.

As in the rest of transducers manufactured by SACI, both current and voltage transformers are used in the input stage, providing isolation and the level change required.

2.2.2. – Multiplexer and A/D converter.

An A/D converter, ten bit plus sign, is used to digitize the signals. An internal multiplexer allows to switch the signal to the converter. The sampling is done exactly at 32 samples per signal cycle. The microprocessor changes the timing accordingly to the supply frequency, and the device can work both to 50 and 60 Hz.

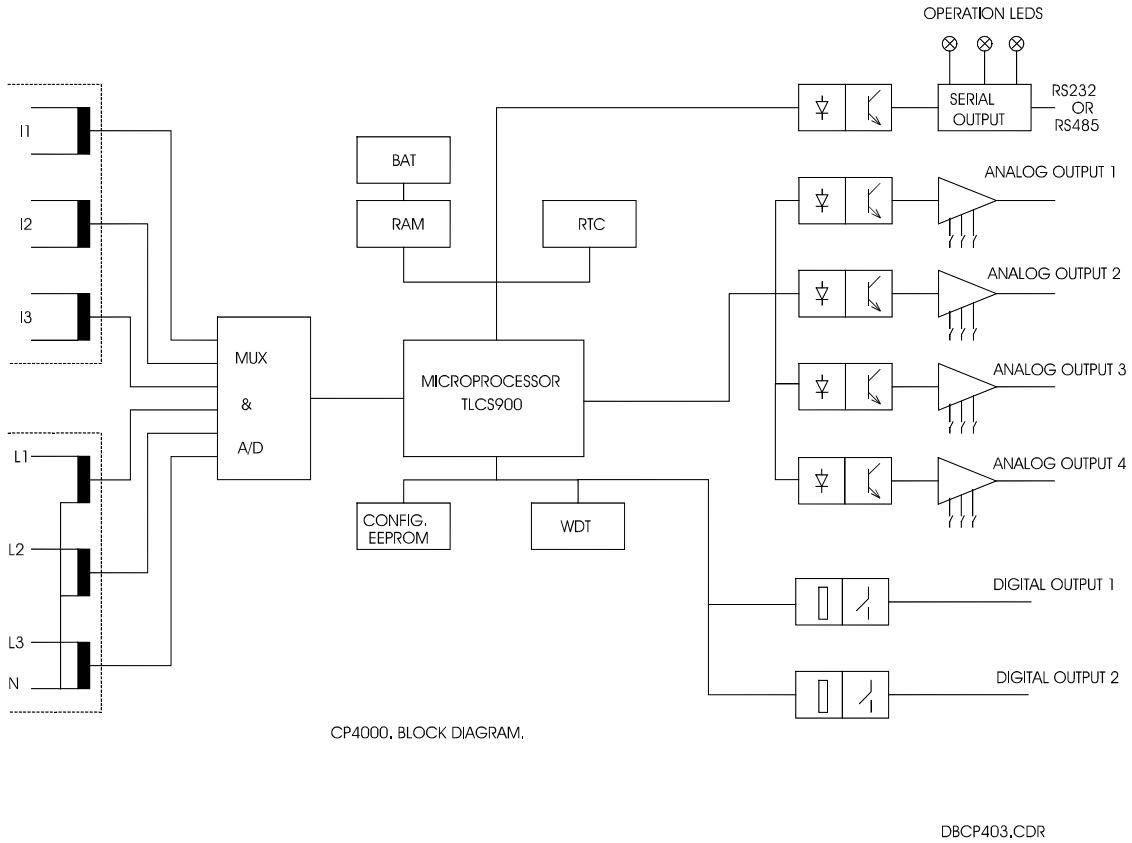

2.2.3. – Microprocessor.

The device used is the TLCS900 from TOSHIBA. It is a 16 bit unit, 32Kbytes ROM, 1Kbyte RAM, two serial ports, ten bit A/D converter, and timers.

2.2.4. – EEPROM.

The configuration data, as full scale definition, or identity, are stored in an 4Kbit EEPROM. In this memory are stored also the calibration data, as the calibration process is done by means of SW commands.

2.2.5. – RAM.

A nonvolatile RAM is used for storing the data related to energy measurement. Two options are possible for its supply. A Ni-Cd battery can be chosen for those applications requiring long time storage, at least two months. In the cases in which no more than three days are demanded, a supercap capacitor is used, which although provides less hold time, increases the long term reliability of the equipment.

2.2.6. - WDT.

A watchdog timer is used to reset the microprocessor in the case of SW failure due to a strong electrical perturbation.

2.2.7. – RTC.

A real time clock is available in order to provide the date and hour for the device.

2.2.8. – SERIAL OUTPUT.

A serial output communication line is available in two formats: RS232, or RS485. In both cases, as in the rest of devices, is isolated from the measuring circuit, as well as from the analog or digital outputs. In this way, the serial line can be left floating, and can be connected to earth in only one point if needed. The RS485 link can be chosen as 2 or 4 wires, and several baud rates can be selected.

2.2.9. – ANALOG OUTPUTS.

Each analog output is isolated also from the measuring circuit by means of DC/DC converters and optoisolators. It is possible to select for any of them any live variable. The selection of variable is done by means of SW commands. The hardware configuration, however, is done by means of mechanical switches, and must be specified in the order.

2.2.10. – DIGITAL OUTPUTS.

Two digital outputs are provided. The mode of operation is programmable, and can be:

A. - Energy pulses.
B. – Alarms.
C. – General outputs commanded by the computer.

Relays have been chosen for this purpose, and they do not impose any restriction in the load to be connected to them. In this way, if used for alarms or general purpose outputs, they can handle directly a 4A load at 250 V AC.

2.2.11. – Optical coupling.

Both analog outputs and communication line are provided with optical isolation. In this way, the outputs can be freely connected. In the case of serial line, this allows to connect the screen of the cable to earth in only one point in the installation.

2.2.12. – Power supply.

The power supply provides the different voltages needed for the circuits operation.

3.- VARIANTS.

The instruments are not intended to be changed in the field. Each option must be defined in the initial order.

3.1.- Models:

CP4000	Single phase
CP4001	Three phase, balanced
CP4002	Three phase, three wires, unbalanced
CP4003	Three phase, four wires, unbalanced

3.2.- Voltage input :

100, 230 or 400 V ± 50% (phase to phase value)

3.3.- Current input:

1 or 5 A.

3.4.- V aux:

a) 63.5, 110, 230, or 400 V AC, ± 20%.
b) 85...264 V AC.
c) 24, 48, 110 V DC ± 20%.
d) Universal: 85...264 V AC /100...240 V DC.

3.5.- Analog outputs:

a) ±1, ±5, or ±20 mA (internal switches).
b) ±1, ±5, or ±10 V (internal switches).
c) None.

3.6.- Serial output:

RS232, RS485.

3.7.-Digital outputs:

Relay type.

Pulse duration 100 ms <T1 <120 ms.
Time between pulses T2 >100 ms.

4.- DIMENSIONS AND MOUNTING.

4.1.- Dimensions.

See annex 5.

4.2.- Mounting

The device is mounted in DIN 50022 rail, or by means of two screws to the back panel.

Before connecting of the device, check the following:

- The label data correspond to the installation values, voltage, current, etc.
- The phase sequence is right, and each phase is connected to the terminal marked.
- The current transformers are correctly mounted and cabled. The current must enter into the transformer from the K side. In this way, the terminal k must be connected to the terminal 1 in the CP4000, and the terminal l to the terminal 3.

5.- CABLING.

5.1.- Electrical wiring.

The electrical marking corresponds to the standard marking for three phase lines, as depicted:

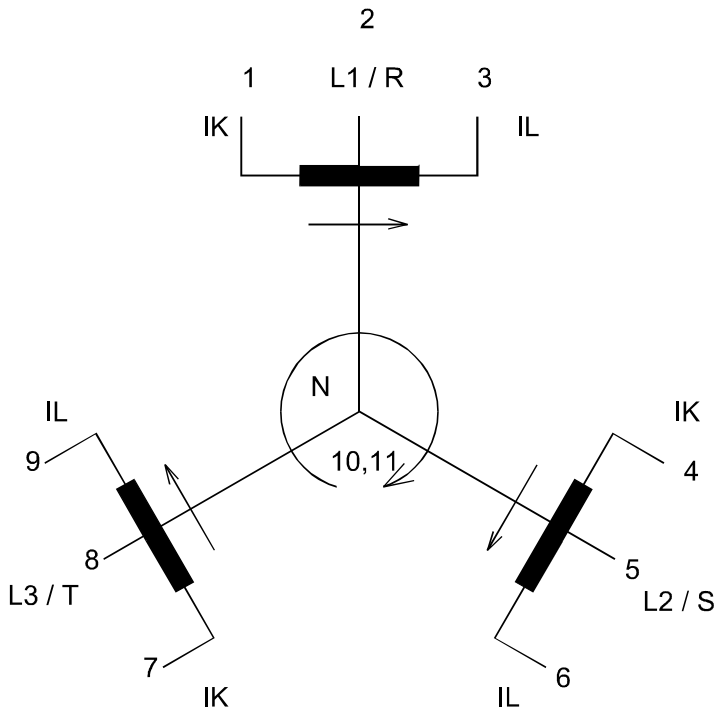

See connection diagrams in annex 6.

5.2.-Analog outputs.

Any measured parameter can be sent through any analog output, by means of SW commands sent through the serial communication line. The output range must have

been selected first among the versions above. Once the range has been selected, the possible actual output must be programmed as the following diagrams show. Any value inside the range can be programmed for the points X0, X1, or X2, or Y0, Y1 or Y2, without any other limitation than:

X0 < X1 < X2

Mmin < Y0 < Y1 < Y2 < Mmax

Where Mmin is the lowest value for the output range, and Mmax is the highest one.

In the standard case the output is straight, without any kink, the values X1 and Y1 can be omitted.

The annex drawings show the different ways to program the analog outputs.

To program the analog outputs you have to read our software manual.
The way to do it is trought the serial port with and adecuate connection.

For example if you have a ratios: 1200/5 A and 11300/110 V , to get 4 analog output in 4..20 mA for an adjust Vrs= 0..11300V, P=-1...20MW, Q –15...15Mvar and cosφ -0,5 C..+0,5 L, then it must be programm to Vrs: 0..100%, P:-15...85.15%, Q:-3,87...63,87% and cosφ, -50...50% .
Or cosφ -0.8 - 1 - +0.2 then you set –80..+20%. (only in cp4003)

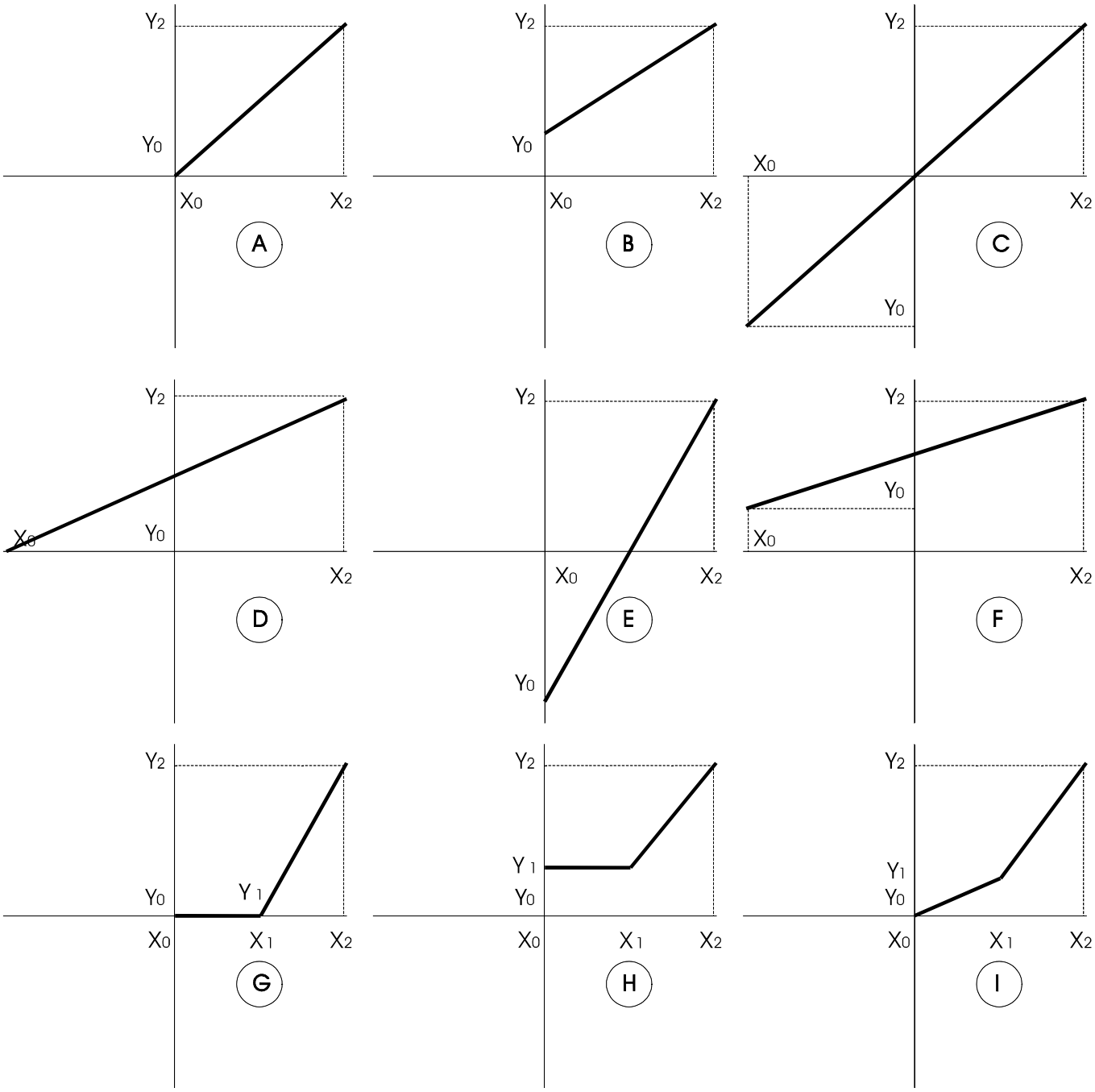

CP3000. CARACTERÍSTICAS DE SALIDA

5.3.- Serial line.

Two types of serial line can be ordered: RS232, and RS485.

	Name	Pin
RS232:	GND	5
	TD	2
	RD	3
RS485	GND	4
	L+	9
	L-	5
	LA+	8
	LA-	7

RS232 pins are named as the computer to be connected. TD means data transmitted by the computer, and received by the CP4000X.

RS485 connections are named L+ and L-. They must be connected to homologous terminals in the network, that is, the same wire goes to all terminals marked L+, and the other wire goes to all terminals marked L-.

If four wires connection is required, the terminals marked LA+ and LA- must be used. If the RS232 to RS485 IFRA's are used, the terminals with the same name will be connected together. If the device is going to be connected to an existing network, L+ and L- are the transmission line, and LA+ and LA- the reception line.

The following schematic diagram shows the typical connection for two wires.

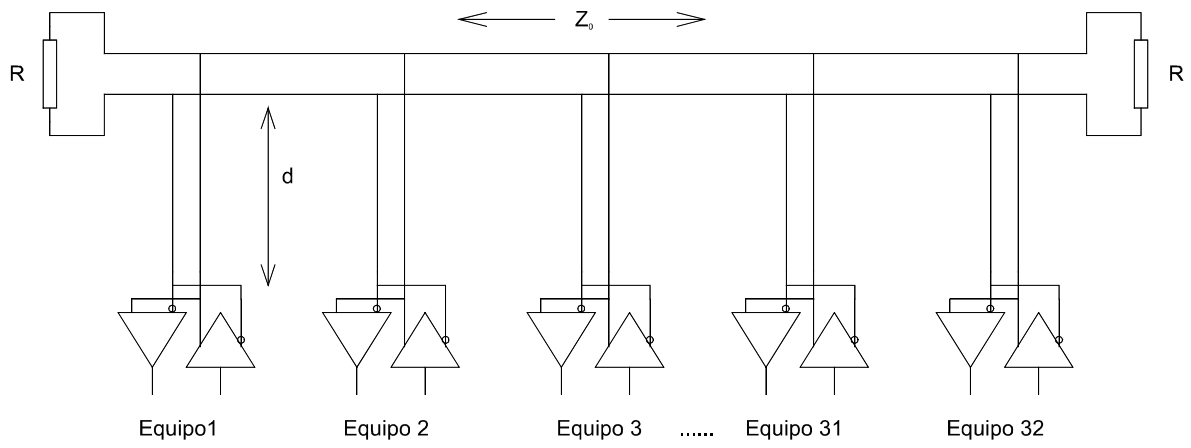

If the transmission line length is longer than a few hundred meters, termination resistors are required, nominally 120 ohms.

5.4.- Digital outputs.

Operation mode must be selected first, among the ones shown in the table.

RL0	RL1
Reactive energy	Active energy+
Active energy -	Active energy +
Reactive energy Ind.(+)	Reactive energy Cap.(-)
Alarm 0	Alarm 1
Output 0	Output 1

Both for active or reactive energy, an energy pulse must be defined. Each time this quantity measured, the associated relay is closed during 100 ms.

In the case of alarm mode, the variable must be defined, as well as the mode, -(maximum or minimum)-, and the value expressed in unitary ratio over the FSD. The value can be negative, and must be between –1.20 and +1.20.

The uncommitted mode does not require any value to be programmed.

The output relays have also a common point. No protection device is included, and then the manufacturer's characteristics must be carefully respected, and some kind of external sectioning device must be provided. The relays used are the model JS from FUJITSU/TAKAMISAWA, able to switch 70 VA/250 V AC, or 3 A on resistive load.

5.4.- Power supply.

A separate connection is provided for the power supply. In this way, a different supply can be used, allowing to maintain the unit working, - for instance to be able to communicate-, without measuring voltage. The AC supply consists of a multi secondary transformer, rectifiers, filters, etc. This transformer is designed for one voltage input, allowing a ±20% operating range.

A universal power supply can be also provided allowing to be connected from 85 to 264 V AC, or 90 to 230 V DC.

6.- COMMUNICATION PROTOCOL.

The CP4000 transducers are equipped with a serial line in order to be able to communicate all the measured variables to any device with serial input capability. There are two different versions, one as RS232 standard, and the other as RS485. The first one can be used when the connection is point to point, and the second in multidrop connections. In this case, up to 32 devices, - as the standard specifies-, can be connected to the same communication line, to a maximum length of 1200 meters, allowing gathering data coming from any measurement unit.

Both versions are isolated from the rest of circuitry by means of optical couplers. This avoids problems in earth connection, breaking any grounding loops, and allows to connect the cable screen to earth in the best point of the installation.

Although the signal levels are different, the protocol used in both is the same, and complies with the JBUS/MODBUS protocol. This is a master-slave protocol, very common in PLC's. The communication is always started by the master, and no spontaneous messages are allowed.

Each transaction consists of one request frame, generated by the master, and one reply frame, generated by the slave. In the case the master sends a writing command, the slave sends an acknowledge message. Only two commands are used for the exchange, the Write multiple word command (type 16H), and the Read multiple word command (type 04H). The standard transmission rate is 9600 Bps, 8 bits, no parity, and one stop bit. Other speeds are possible, but must be specified in the order.

7.- HARDWARE CONFIGURATION.

The device must be ordered for current or voltage output. Once defined, the range can be configured by means of internal jumpers, located in the output board, as depicted in the following figure.

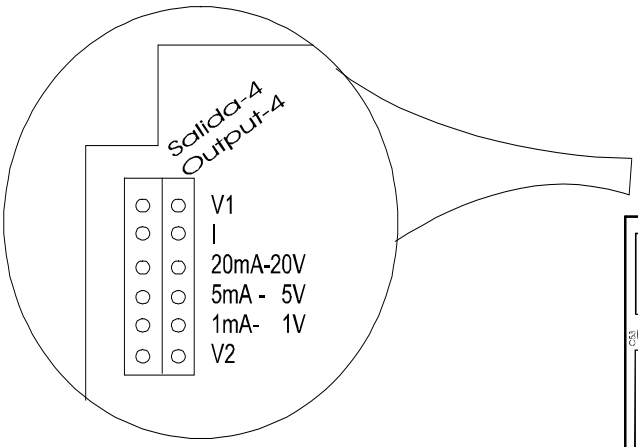

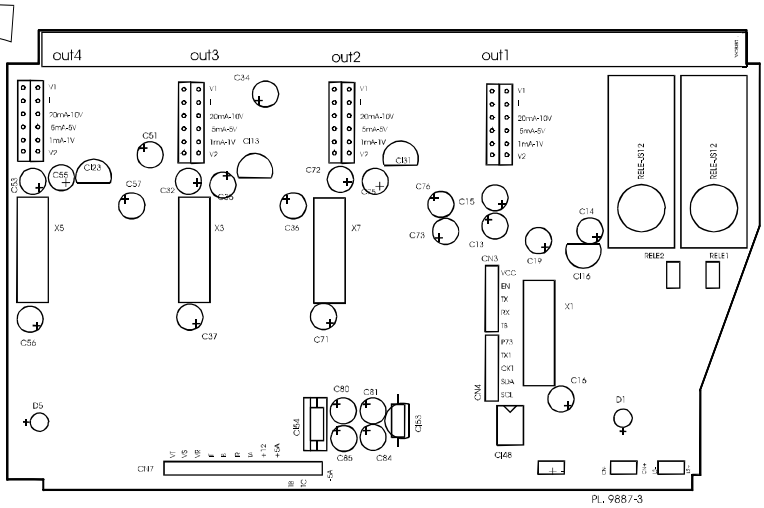

Ejemplo de salida 4..20mA

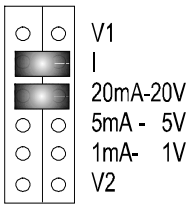

For voltage output, both jumper V1 and V2 must be set.
For current output, they must be open and I must be set.
The range is selected through the rest of the jumpers.
The units are adjusted in factory only for voltage or current output, and then this is not an option changeable in the field.

8.- RELATED SOFTWARE.

CP4000 V 2.0.2 is available. It allows to configure the device, and to read all the measures taken.

9. - SAFETY REQUIREMENTS.

The following safety precautions must be observed at all times during operation, mounting, service or repair. Failure to comply with these precautions, or with any other warning indications stated in this manual, violates the intended safety standards of design, manufacture and use of the product. SACI does not assume any liability in the case these precautions are not followed.

2. 1. - Do not connect or disconnect the device under voltage. Do not mount the equipment in field installations unless another person is present.

2.2. - Do not use the device in an explosive atmosphere, or in wet or damp areas.

2.3. - Do not open the equipment. In the case of repair, follow the service instructions, and do not substitute any part or modify the circuits.

2.4. - Change only the internal switch position with the instrument disconnected.

2.5. - The units are not provided with any type of protection device in voltage or current circuits. An external switch or circuit breaker must be provided in the installation, close to the unit. If the rating of the general protective device is less than 10 A, this one can be used for this purpose.

2.6. – Do not disconnect the current inputs without shorting first the associated transformers, as dangerous voltages can be produced.

DIMENSIONS.

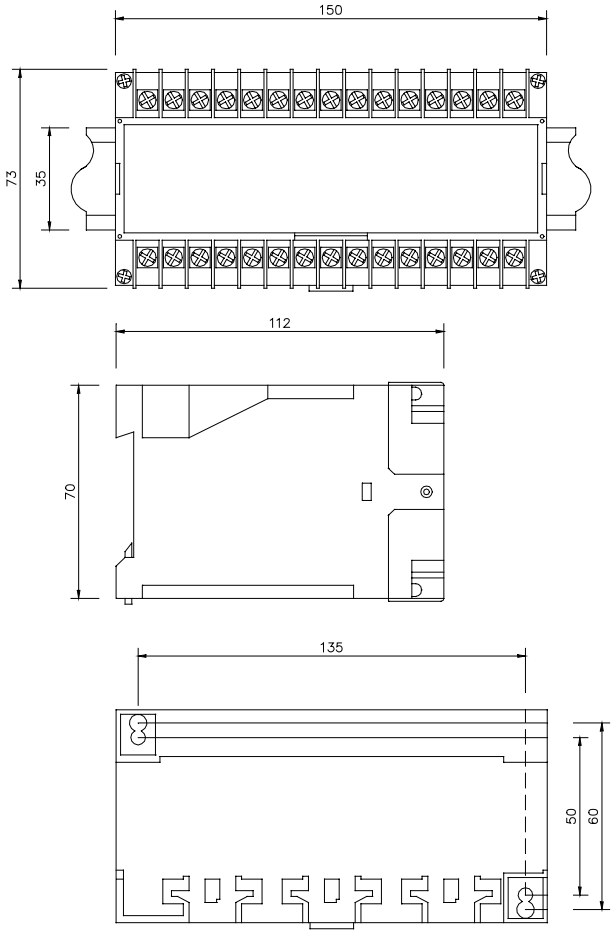

CONNECTION DIAGRAMS.

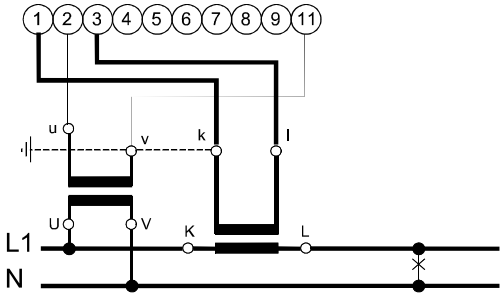

SINGLE PHASE

CP4000

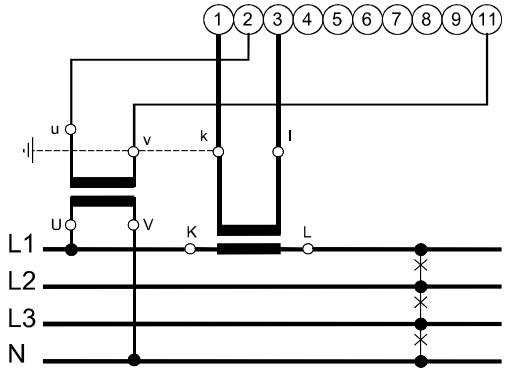

THREE PHASE BALANCED
(A)

CP4001

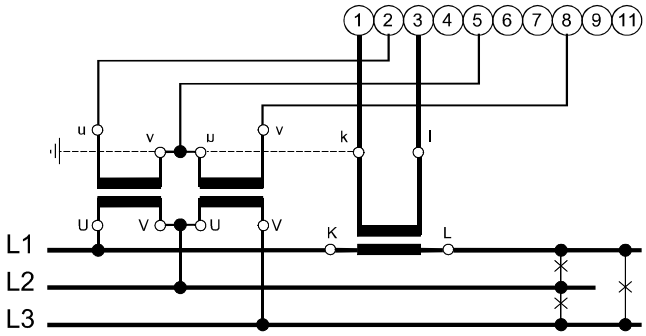

THREE PHASE BALANCED
(B)

CP4001

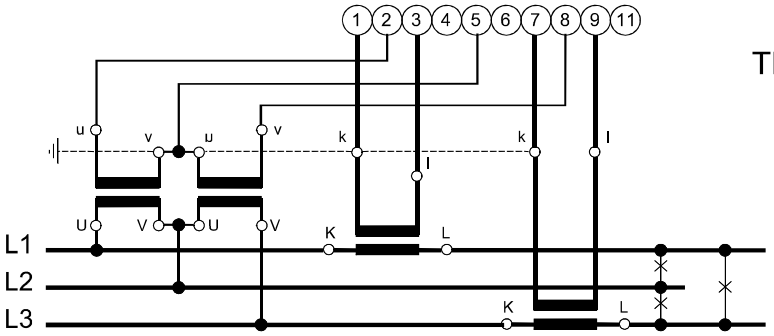

THREE PHASE UNBALANCED
THREE WIRE

(TWO SYSTEMS)

CP4002

ESQCP4AI.cdr

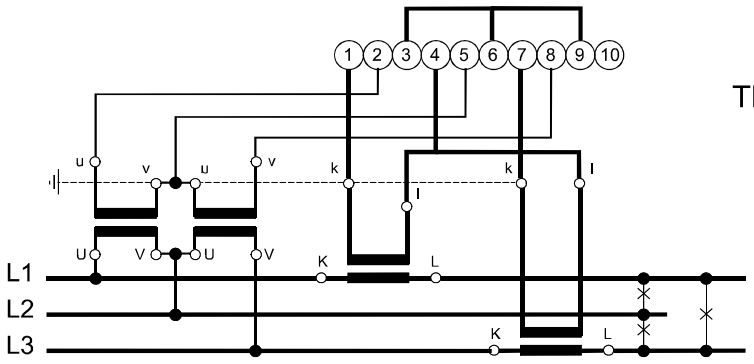

THREE PHASE UNBALANCED
THREE WIRE

CP4003

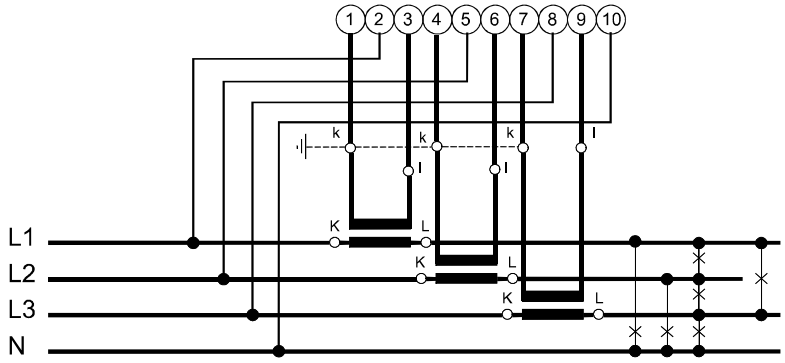

THREE PHASE UNBALANCED
FOUR WIRES
(THREE SYSTEMS)

CP4003

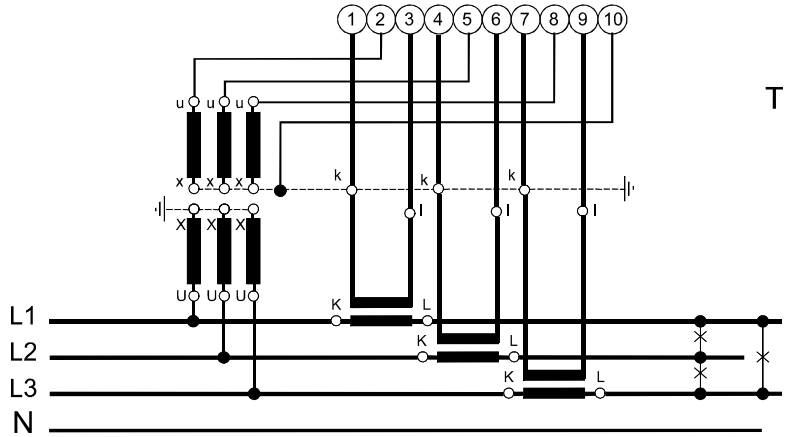

THREE PHASE UNBALANCED
THREE OR FOUR WIRES
(STAR CONNECTION)

CP4003

esqcp4bl.cdr

* Optional Characteristics.

S.A. DE CONSTRUCCIONES INDUSTRIALES
La Granja St,84 – 28108 Alcobendas (Madrid). Spain.
Tel. : 34 - 91 - 519.02.45 Fax. : 34 -91 – 416.96.46
http://www.saci.es e-mail : saci@saci

Specifications subject to change without notice.