KLY-HK-KY02 Series Open Loop Hall Current Sensor

KLY-HK-KY02系列开环霍尔电流传感器

KLY-HK-KY02 series dismountable hall effect current sensor is an open loop device based on the measuring principle of the hall effect,with a galvanic isolation between primary and secondary circuit.It provides accurate electronic measurement of DC,AC or pulsed currents.This series of sensor demountable,easy to install.

KLY-HK-KY02系列传感器是应用霍尔效应开环原理的电流传感器，应用在电隔离条件下测量直流、交流、脉冲电流。此系列传感器为可拆卸型，安装非常方便。

Products Features

- Excellent accuracy
- Very good linearity
- Optimized response time
- No insertion losses
- High immunity to external interference
- Low temperature drift
- Wide frequency bandwidth

产品特点

- 精度高
- 良好的线性度
- 最佳的响应时间
- 无插入损耗
- 抗干扰能力强
- 低温度漂移
- 频带宽

Instructions 使用说明

1.Incorrect wiring may cause the damage of sensor.
1.保证接线正确，错误的接线可能会导致传感器损坏。

2.When the measured current through the center hole of the sensor,the current will be measured at the output end.
2.当待测电流通过传感器的穿心孔，可在输出端测得电流大小。

3.The dynamic performance (di/dt and the response time) is the best when the primary hole is fully filled with the bus bar.
3.母排完全充满初级穿孔时动态表现(Di/dt和响应时间)为最佳。

4.User can adjust the output extent of sensor if necessary.
4.传感器输出幅度可根据用户需求进行适当的调节。

5.Rated input current and output voltage of sensor can be customized.
5.可按用户需求定制不同额定输入电流和输出电压的传感器。

Electrical Data(Ta=25℃±5℃)电气参数

Parameters参数 \ Type型号	KLY-HK-KY02-0E1C					
Rated input 额定测量电流 I_{PN}	±200A	±500A	±800A	±1000A	±1500A	±2000A
Measure range 测量范围 I_P	±400A	±1000A	±1200A	±2000A	±3000A	±3000A
Rated output voltage 额定输出电压 V_S					±4V(±1%)	
Supply voltage 电源电压 V_{CC}					±15V(±5%)	
Current Consumption 功耗电流 I_C					<25mA	
Offset voltage 零点失调电压 V_0					<±20mV	
Offset voltage drift 失调电压温漂 V_{OT}	@ I_p=0 , T_A = -40℃～+85℃				<±1 mV/℃	
Hysteresis offset voltage磁失调电压 V_{OH}					<±20mV	
Linearity 线性度 ε_L					<1%FS	
Response time 响应时间 T_R	@ 50A/μS , 10% - 90%				<5 μS	
Galvanic isolation 绝缘电压 V_D	@ 50HZ,AC, 1min				3kV	
Frequency bandwidth 频带宽度	@ -3db				DC～25K Hz	
Load resistance 负载电阻 R_M					≥10KΩ	
Operating temperature 工作环境温度 T_A					-40℃～+85℃	
Storage temperature 贮存环境温度 T_S					-40℃～+100℃	
Mass(approx) 毛重（约） m					300g	
Standards执行标准					JB/T 7490-2007	

Mechanical Dimension(for Reference Only)结构参数

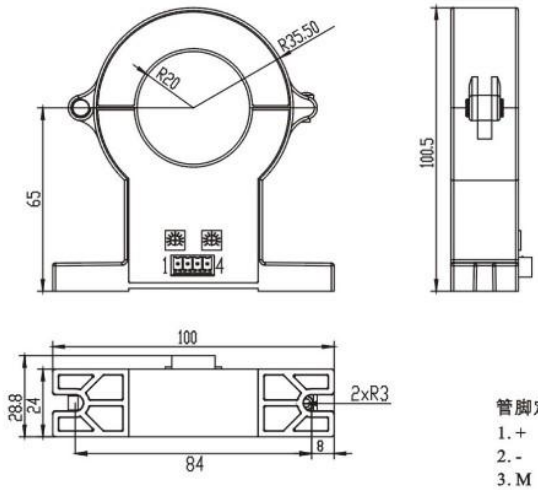

管脚定义 Pin Definition
1. + (Vcc)
2. - (Vss)
3. M (Vout)
4. G (GND)

Circuit Connection Diagram电路连接示意图

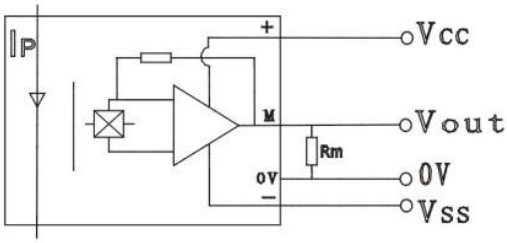

Casing material 外壳材料: 符合UL94-V0