KLY-HL-BY05 Series DC Leakage Current Sensor

KLY-HL-BY05系列直流漏电流传感器

KLY-HL-BY05 series DC leakage current sensor is a series of new device developed according to principle of electromagnetic induction. Its low current is stable. It is highly insulating between its primary coil and secondary coil. This sensor is used to measure current of signal system, circuit, and leakage monitoring system, as well as to measure current difference.

KLY-HL-BY05系列直流漏电流传感器是应用磁调制原理研制而成的一种新型电流传感器，其小电流的稳定性好，初级与次级之间高度绝缘，用于讯号系统、线路检测、漏电监测系统、电流差值测量。

Products Features

Excellent accuracy
Very good linearity
Optimized response time
No insertion losses
High immunity to external interference
Low temperature drift
Wide frequency bandwidth

产品特点

精度高
良好的线性度
最佳的响应时间
无插入损耗
抗干扰能力强
低温度漂移
频带宽

Instructions 使用说明

1.Incorrect wiring may cause the damage of sensor.
1.保证接线正确，错误的接线可能会导致传感器损坏。

2.When the measured current through the center hole of the sensor,the current will be measured at the output end.
2.当待测电流通过传感器的穿心孔，可在输出端测得电流大小。

3.The dynamic performance (di/dt and the response time) is the best when the primary hole is fully filled with the bus bar.
3.母排完全充满初级穿孔时动态表现(Di/dt和响应时间)为最佳。

4.User can adjust the output extent of sensor if necessary.
4.传感器输出幅度可根据用户需求进行适当的调节。

5.Rated input current and output voltage of sensor can be customized.
5.可按用户需求定制不同额定输入电流和输出电压的传感器。

Electrical Data(Ta=25℃±5℃)电气参数

Type型号 / Parameters参数	KLY-HL-BY05-0G1C				
Rated input 额定测量电流 I_{PN}	±10mA	±20mA	±30mA	±40mA	±50mA
Measure range 测量范围 I_P	±15mA	±30mA	±45mA	±60mA	±75mA
Rated output voltage 额定输出电压 Vs				±5V(±0.5%)	
Supply voltage 电源电压 Vcc DC				±12V~±15V(±5%)	
Current consumption 功耗电流 Ic				20+IpX(Np/Ns) mA	
Zero voltage 零点电压 V_0				≤±50mV	
Offset voltage drift 失调电压温漂V_{OT}	@ I_P=0 T_A=-40℃～+85℃			≤± 1.5 mV/℃	
Linearity 线性度 ε_L				≤1%FS	
Response time响应时间T_R				≤50mS	
Galvanic isolation 绝缘电压 V_D	@ 50HZ, AC, 1min			2.5kV	
Load resistance 负载电阻R_M				≥10KΩ	
Operating temperature 工作环境温度 T_A				-40℃～+85℃	
Storage temperature 贮存环境温度 Ts				-40℃～+100℃	
Mass(approx) 毛重（约） m				99g	
Standards执行标准				JB/T 7490-2007	

Mechanical Dimension(for Reference Only) 结构参数

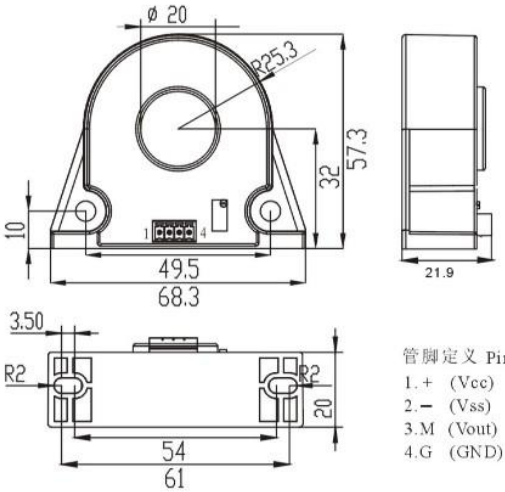

管脚定义 Pin Definition
1.+ (Vcc)
2.− (Vss)
3.M (Vout)
4.G (GND)

Circuit Connection Diagram电路连接示意图

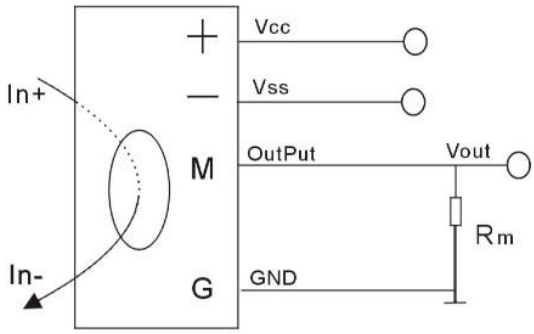

Casing material 外壳材料: 符合UL94-V0